# MODEL GK6

Surface mounted pool light for concrete & fibreglass Pools and Spas. ( Halogen ).

SPA ELECTRICS PTY LTD
www.spaelectrics.com.au

- Unique electrical connection, so power cable does not intrude into light cavity, eliminating possible sources of water entry.
- Cable can be disconnected from back of light.
- Extra low voltage: 12 volt, 100 watt.
  24 volt, 150 watt. ( export only ).
- Spa Electrics Pty Ltd is a fully Australian owned and operated company.
- Patented.

Normal Plate.

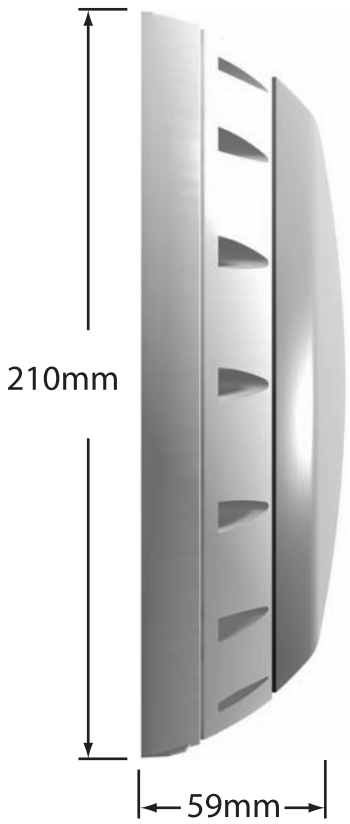


Vinyl Plate.

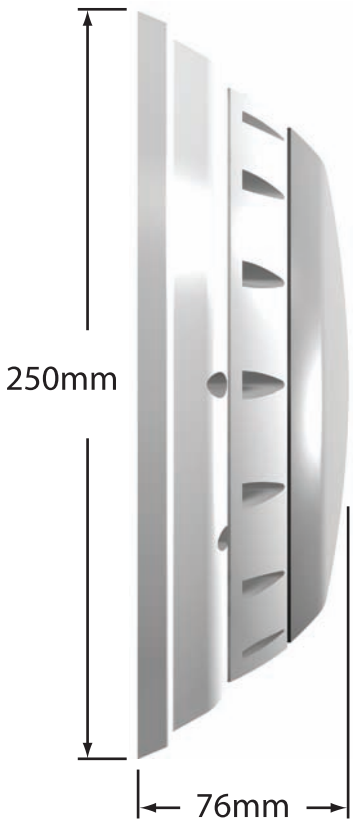


## Options for other Pools.

### Fibreglass Pools: Part No. GK6719

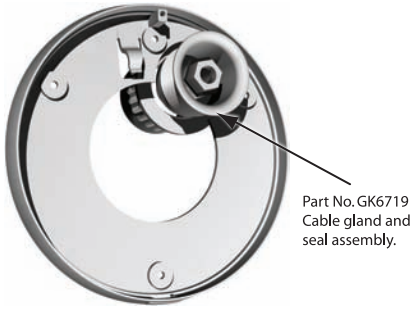


### Vinyl Pools: Part No. GK6721

### Pebble or Textured Pools.

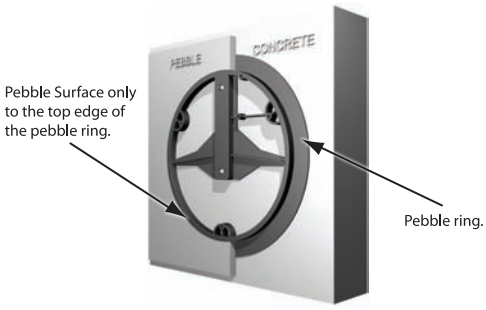


When using pebble mix on your pool, attach the pebble ring to the finished concrete wall with the pebble mix, then ensure the final pebble surface is flush with the inner and outer raised edge of the pebble ring.

**T:** 61 [03] 9793 2299 | **F:** 61 [03] 9793 1799 | **E:** info@spaelectrics.com.au
**ABN:** 96 416 805 239 | **P:** PO box 4410, Dandenong Sth, Victoria 3164
www.spaelectrics.com.au

Revision : 20090625

# Concrete.

## Mounting Instructions for the Spa Electrics GK6 surface mounted light.

### Step 1.

- Lights should only be submerged to a maximum depth of 400mm to the top of the light, any deeper and the warranty will be void.
- Ensure that the 'TOP' marking on the backplate is facing up.
- Affix the backplate to the finished pool wall using only the screws provided.

### Step 2.

Feed the cable through the conduit.

- Ensure enough cable is left behind light, so that the light can be raised above the coping for ease of servicing.
- Hook the cable under the clip and spool the remaining cable into back of light.
- Clip the bottom of the light into the bottom of the backplate, then tilt the light up until it is properly seated.

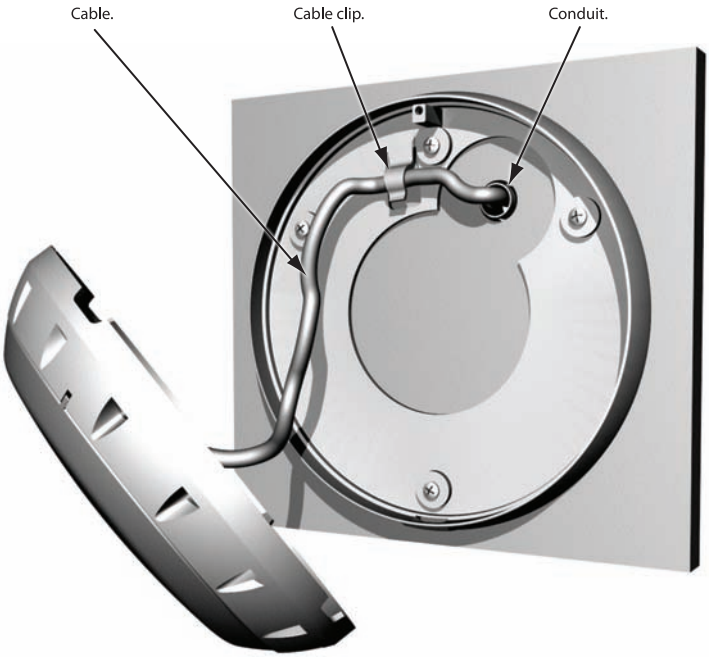


### Step 3.

Gently tighten the fixing screw to lock the light securely into the backplate.
Once your Light is fully submerged it is ready for use.

### Important Points to note.

- The light should be installed on a flat wall.
- The top of the light should be installed no deeper than 400mm below water level for ease of servicing.
- For safe and proper installation, use only parts (screws, plugs, wire etc) provided.
- Your Spa Electrics transformer must be installed in an accessible location ( not in roof or under floors ).
- Do NOT shorten the supplied cable, if in doubt call Spa Electrics.
- If planning to install the GK6 light into a vinyl lined pool you will require the GK6721 vinyl mounting kit.
- If planning to install the GK6 light into a fibreglass pool you will require the GK6719 fibreglass mounting kit.
- When using pebble mix, attach the pebble ring to the finished concrete wall with the pebble mix, then ensure the final pebble surface is flush with the inner and outer raised edge of the pebble ring.
- To ensure maximum life, your light should be used regularly throughout the year, i.e once per week.
- Do not operate your halogen underwater light for a continuous period extending beyond eight hours per day.
- This product has been designed for domestic use only, not for commercial or security purposes.

### Warnings.

- The light must be water cooled at all times. DO NOT switch the light on until installation is complete and the light is fully submerged in water.
- Use only recommended cables for this light.
- Ensure sufficient additional cable is coiled behind the light for servicing. (800mm to 1000mm).
- This light is not suitable for horizontal mounting.

Note : Spa Electrics Pty Ltd. will assume no responsibility or liabilty for pool light conversions that are installed incorrectly or are connected to faulty or non approved cables or transformers.

Revision : 20090625